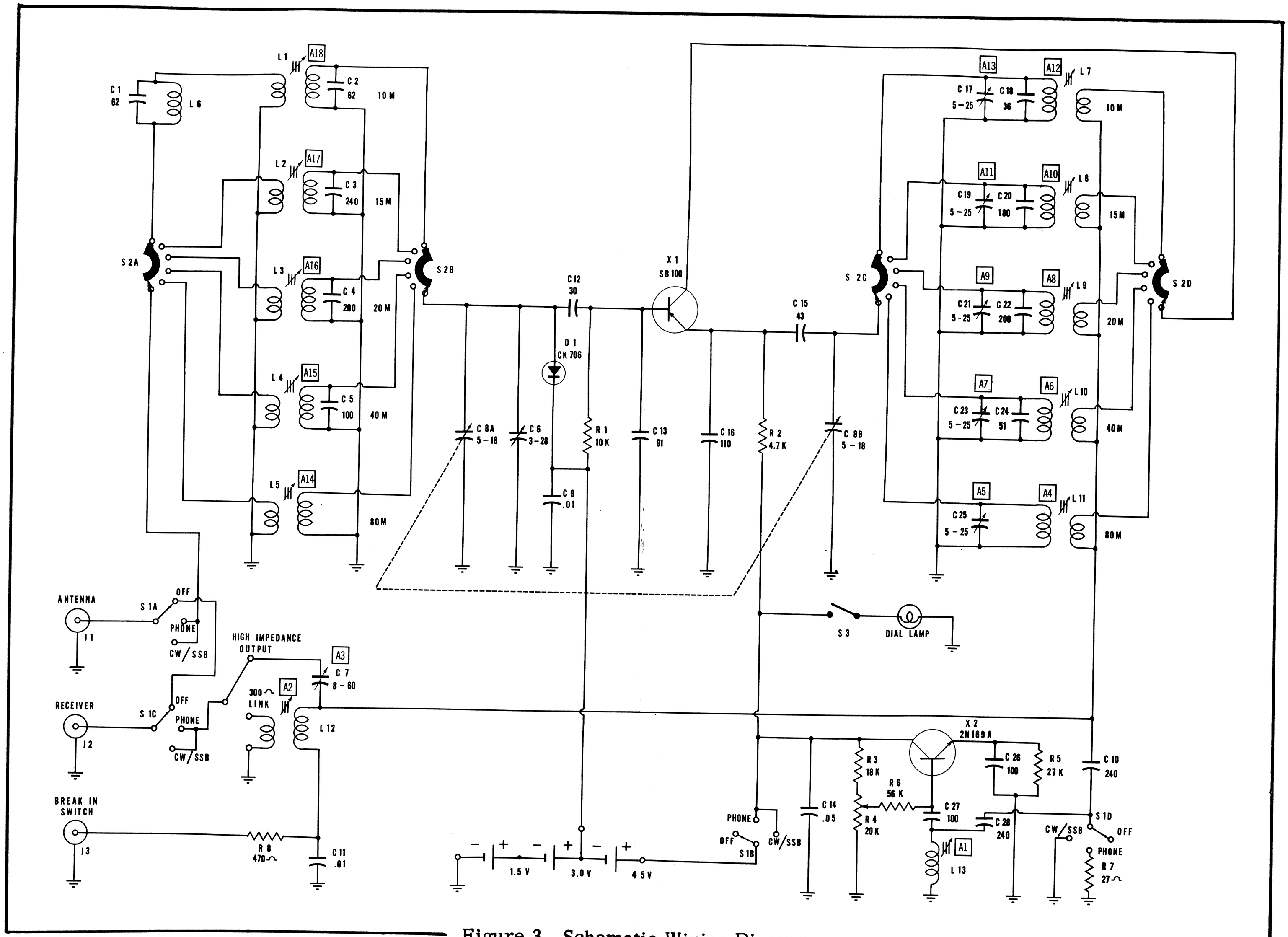

Figure 3. Schematic Wiring Diagram